MERLYN™

M

5+ Series

Technical Information

## Shower Wall

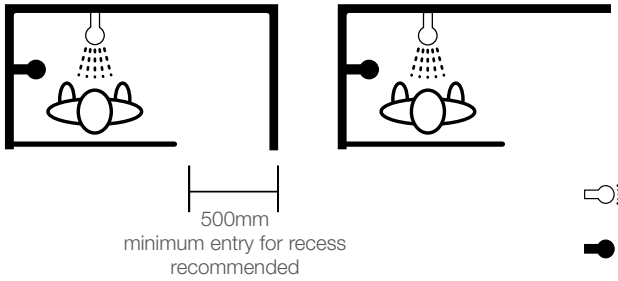


* Suitable for recess or corner situation
* Product is reversible
* High level support rail
* Note: rail size supplied 1000mm can be adapted to size

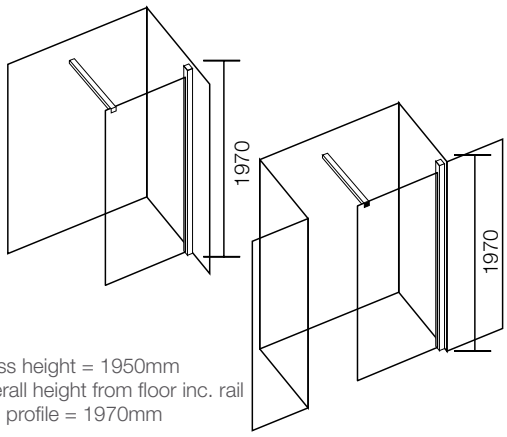


Glass height = 1950mm
Overall height from floor inc. rail and profile = 1970mm